Mazda 6, Ceramic Brake Pad, D1642/D755, CBY3-33-23Z, F

Our Product Introduction

Basic Information

- Place of Origin: China
- Brand Name: OEM
- Certification: ISO9000
- Model Number: ALL
- Minimum Order Quantity: 100
- Price: 5.00-25.00
- Packaging Details: export packing
- Delivery Time: 30-60
- Payment Terms: T/T, LC
- Supply Ability: 15 Million

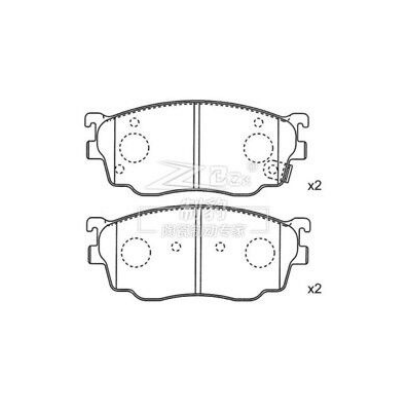

Product Specification

- Product Name: Mazda 6 Ceramic Brake Pad
- Model: Mazda 6
- Type: Brake Pad
- Material: Ceramic
- Factory No.: ZK-20001
- F/R: F
- FMSI: D1642/D755
- OEM: CBY3-33-23Z
- Braking System: SUM
- Highlight: **sum ceramic brake pad**, **sum ceramic brake pads**

for more products please visit us on heritobrake.com

Our Product Introduction

for more products please visit us on heritobrake.com

Product Description

Specifications	
Product name	Mazda 6 Ceramic Brake Pad
Model	6
Type	Brake Pad
Material	Ceramic
F/R	F
Factory No.	ZK-20001
FMSI	D1642/D755
OEM	CBY3-33-23Z
Braking System	SUM
Size	
Width	131.35mm
Height	56.1mm
Thickness	15mm
Model_MARKE	Mazda M6/Zotye Z300/Zotye Z500/Zotye SR7/Zotye Damai/Zotye R9

Enhance your Mazda 6 driving experience with our superior Ceramic Brake Pads, model D1642/D755. Designed to meet the exacting standards of part numbers CBY3-33-23Z and F, these brake pads offer a perfect combination of performance and durability.
Our Ceramic Brake Pads are crafted using advanced materials that ensure reduced noise and dust, providing you with a cleaner, quieter ride. The high-friction coefficient material delivers exceptional stopping power and improved safety for your vehicle.
With easy installation and a precise fit for your Mazda 6, these brake pads are the ideal choice for maintaining optimal braking performance. Trust in our Ceramic Brake Pads to deliver reliability and peace of mind every time you hit the road.

Our ceramic brake pads, crafted from a specially formulated ceramic blend, showcase exceptional performance owing to their unique material composition.
The manufacturing process adheres to the rigorous standards of international certification IATF-16949, ensuring the utmost reliability in product quality.
Withstanding temperatures of up to 640°C, our ceramic brake pads offer a reliable safeguard for braking needs under diverse driving conditions.
Employing original high-precision molds and specialized heat treatment techniques, we guarantee the precision and stability of our products.
Addressing brake squeal concerns, our pads boast a friction coefficient of PS 0.35, coupled with heat resistance up to 640°C, maintaining outstanding braking performance even in high-temperature environments. This prolongs lifespan and effectively resolves brake squeal issues.
Prioritizing safety and comfort, our stable friction coefficient preserves brake disc integrity, while the comfortable pedal feel and low-noise design enhance driving pleasure and reduce environmental pollution.
Featuring unique chamfered edges, our pads not only reduce braking noise but also enhance compatibility with counterpart components, further elevating braking performance.
Exceptional heat dissipation performance is achieved through high-temperature and high-pressure burnishing, reducing bedding-in periods and minimizing noise occurrences, thereby enhancing pad cooling efficiency and ensuring braking stability and safety.
Designed for lightweight, our ceramic brake pads, compared to traditional metal ones, effectively reduce vehicle load, improving fuel economy and power performance.
Minimizing brake dust, our ceramic brake pads produce less dust compared to metal counterparts, making them environmentally friendly and less intrusive to the cleanliness of the vehicle surroundings and wheels.
Quality assurance is paramount to us. Through stringent quality controls and continuous research and development efforts, we ensure the stability and reliability of each ceramic brake pad, earning the trust and acclaim of our users.

herito® Herito Auto Parts Co., Ltd./Zibo Dongliang Import and Export Trading Co., Ltd.

86-533-2906-358 ysun7393@gmail.com info@heritobrake.com heritobrake.com

202, Minxiang Road, Sibaoshan Private Science and Technology Industrial Park, High-tech Zone, Zibo City, Shandong Province, China